2603SMTE – ACCESSIBLE TUB-SHOWERS

inches (mm)

Interior: 56 x 30 ¼ x 78 (1420 x 770 x 1980)
Exterior: 60 x 33 ¼ x 79 ¼ (1525 x 845 x 2015)
Fax on Demand #6051

FEATURES

- Gelcoat surface
- 17″ (430 mm) skirt
- Smooth wall
- LH or RH drain
- Partial reinforcement to accommodate standard grab bar locations.
- Additional reinforcement available.
- 5-year limited warranty

OPTIONS

- Grab bars
- Removable seat
- Hand-held shower assembly with slide bar
- Pressure balancing mixing valve
- Curtain rod and/or shower curtain

CODE COMPLIANCE

- ADA
- FHA
- ICC/ANSI A117.1
- ANSI Z124.1.2
- HUD UM73a
- CAN/CSA-B651-04
- CAN/CSA-B45-02

**Code compliant when fully equipped and installed according to guidelines.

AQUATIC ADVANTAGE

- National distribution
- 5 manufacturing facilities
- Private fleet
- Centralized customer service
- Field support
- 24-hour fax-on-demand

COLOR & TRIM OPTIONS

Stock	Premium
Almond	Black
Biscuit	Mexican Sand
Bone	Sandbar
Linen	
Sterling Silver	
White	

**Additional custom colors available. (Contact Customer Service)

AQUATIC
Where Inspiration Takes Shape

Aquatic products may be specified as Lasco Bathware.

AQUATIC
Where Inspiration Takes Shape

Aquatic products may be specified as Lasco Bathware.

TECHNICAL SPECIFICATIONS

Fax on Demand #6051

2603SMTE

Interior: 56 x 30 ¼ x 78 (1420 x 770 x 1980)
Exterior: 60 x 33 ¼ x 79 ¼ (1525 x 845 x 2015)
inches (mm)

ADA/ANSI compliant when fully equipped and installed according to guidelines.

ANSI version shown.

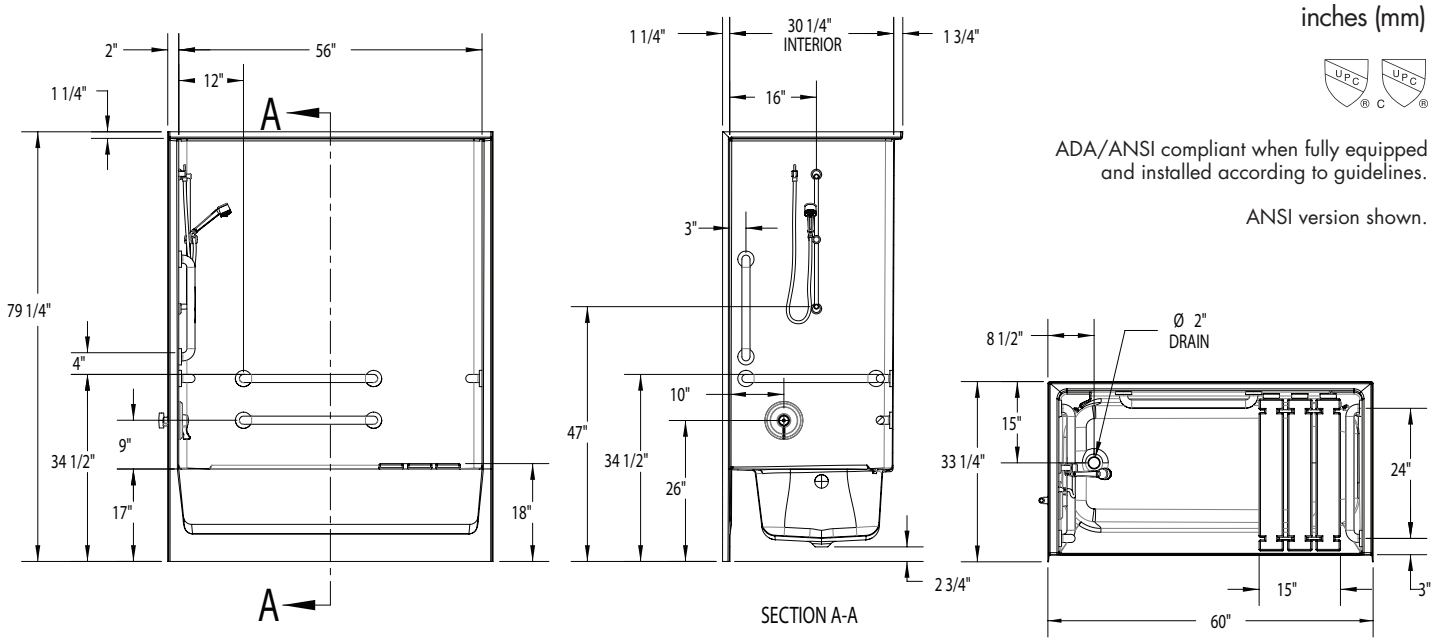

FEATURES lbs (kg)

Dimensional Tolerance ± ⅜". Dimensions needed for site preparation should be measured from the unit. Aquatic assumes no responsibility for preparatory work.

Type and Model #	Material	Wall Finish	Pieces	Drain	Skirt Height	Net Wt.	Pkg. Wt.
Tub-shower #2603SMTE	Gelcoat	Smooth	1	LH/RH	17" (430mm) skirt	199 (90)	209 (95)

DIMENSIONS

Specifications	inches (mm)
Width: Overall / Net	60 (1525) / 56 (1420)
Depth: Overall / Net	33 ¼ (845) / 32 (815)
Height: Overall / Net	79 ¼ (1980) / 78 (2015)
Enclosure Opening:	56 (1420)
Skirt Height:	17 (430)
Drain Rough-In (from Back Wall)	8 ½ (215)
Drain Rough-In (from Side Wall)	15 (380)
Drain: Diameter / Clearance	2 (50) / 2 ¾ (70)

FRAMING DIMENSIONS inches (mm)

Type	D Depth	W Width	H Height	A	B	C
Alcove	33 ¼ (845)	60 ⅛ (1525)	–	6 x 12 (150 x 305)	8 ½ (215)	15 (380)

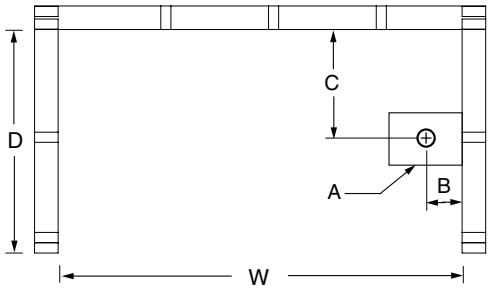

SUMP DATA

Top of Drain to Bottom of Overflow	Capacity to Overflow gal (ltr)	WIDTH @ centerline		DEPTH @ centerline	
		Top	Bottom	Top	Bottom
12 (305)	38 (144)	23 ¼ (590)	21 ¼ (540)	53 ¾ (1365)	45 ¼ (1150)

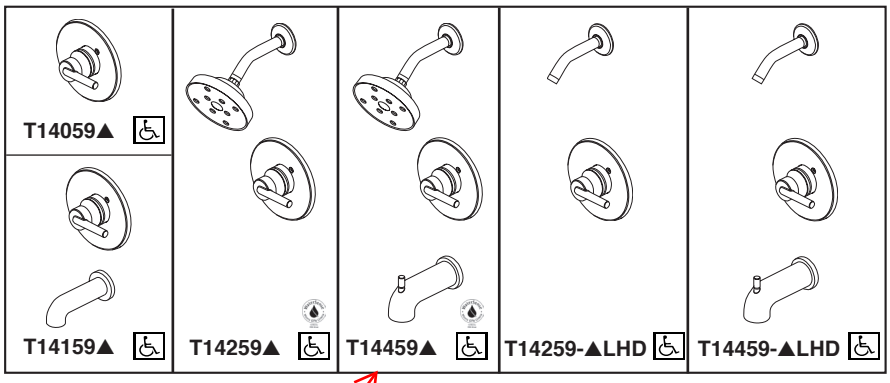

Submitted Model No.:_____

Specific Features:_____

Delta RP70175-15 will be provided, 1.5gpm. See attached.

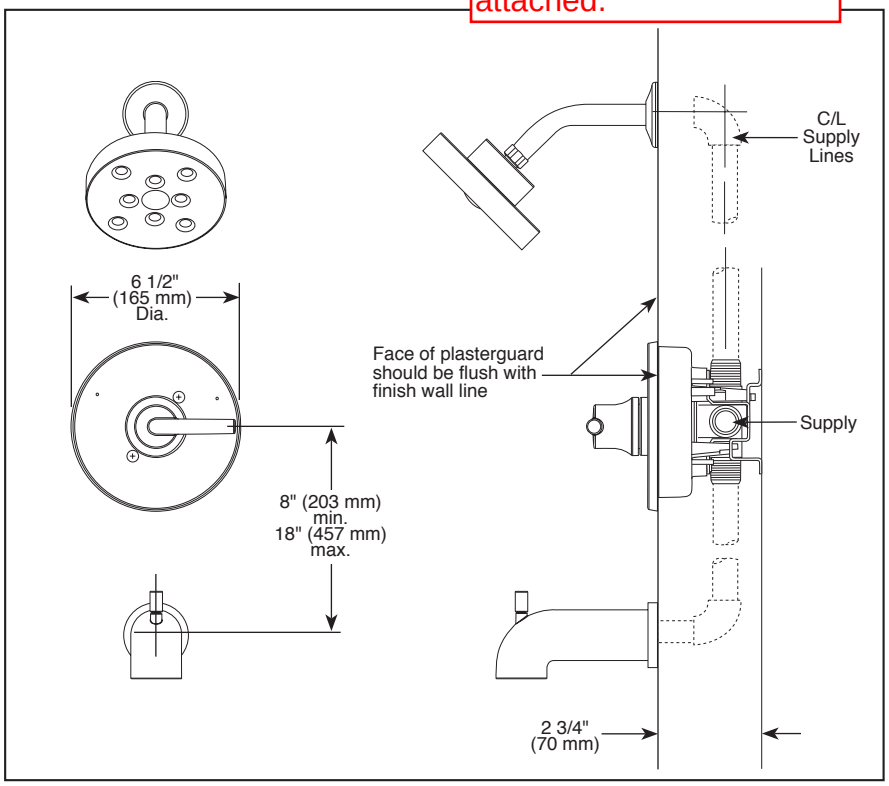

▲ Designate Proper Finish Suffix

RP70175▲ H_2O Showerhead

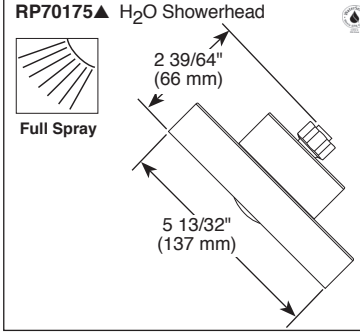

RP73371▲ Pull-Up Diverter

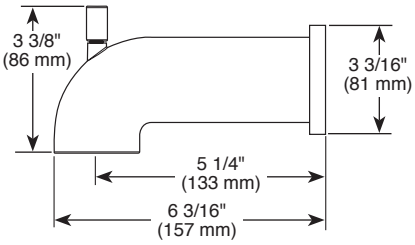

RP77350▲ No Diverter

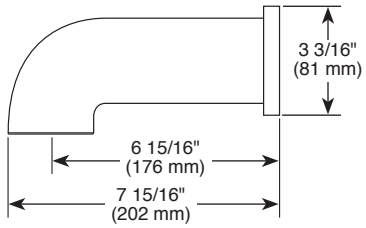

Delta reserves the right (1) to make changes in specifications and materials, and (2) to change or discontinue models, both without notice or obligation. Dimensions are for reference only. See current full-line price book or www.deltafaucet.com for finish options and product availability.

DSP-B-T14059 Rev. F

TUB AND SHOWER FAUCET TRIM

- Trinsic® Bath Collection
- Valve Only (T14059)
- Tub Only (T14159)
- Shower Only (T14259)
- Tub/Shower (T14459)

STANDARD SPECIFICATIONS:

- Pressure balanced single handle bath mixing valve trim
- Temperature only controlled with handle
- Field adjustable means to limit handle rotation into hot water zone
- 120° maximum handle rotation
- All parts replaceable from the front of the valve
- For use with MultiChoice® Universal rough valve body (R10000 Series)
- Lever handle
- ~~Single function H_2Okinetic Technology® showerhead; 2.0 gpm @ 80 PSI~~
- Maintains a balanced pressure of hot and cold water even when a valve is turned on or off elsewhere in the system
- Red/blue pad print temperature indicators on escutcheon
- "-LHD" models indicate less showerhead
- 1/2" CWT slip-on and spout adapter

WARRANTY

- Lifetime limited warranty on parts (other than electronic parts and batteries) and finishes: or, for commercial users, for 5 years from date of purchase.
- 5 year limited warranty on electronic parts (other than batteries); or, for commercial users, for 1 year from the date of purchase. No warranty is provided on batteries.

COMPLIES WITH:

- ASME A112.18.1 / CSA B125.1
- ASSE 1016
- Indicates compliance to ICC/ANSI A117.1 (valve control only)
- EPA WaterSense®

55 E 111th Street, Indianapolis, Indiana 46280
350 South Edgeware Road, St. Thomas, ON N5P 4L1
© 2015 Masco Corporation of Indiana

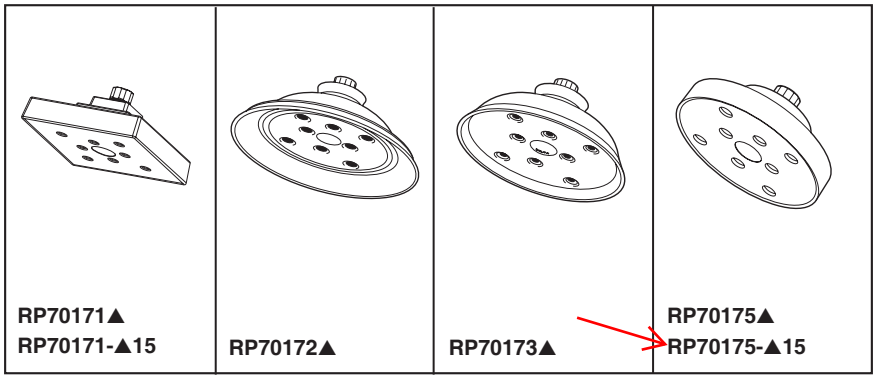

WATER EFFICIENT SHOWERHEADS

■ H_2Okinetic Technology®

Submitted Model No.: _____

Specific Features: _____

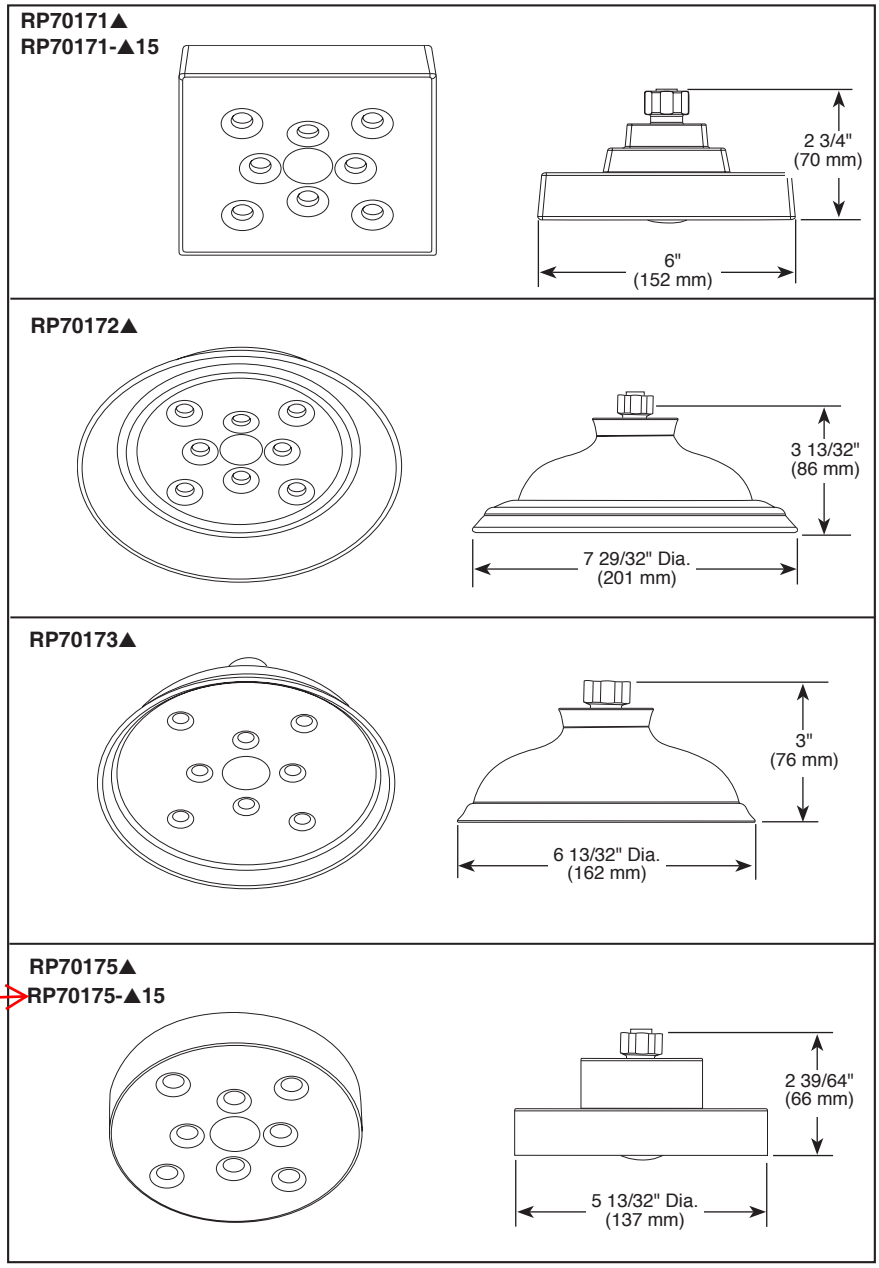

▲ Designate Proper Finish Suffix

STANDARD SPECIFICATIONS

- Full spray function.
- Standard 1/2" pipe itting.
- Maximum 2.0 gpm @ 80 psi, 7.6 L/min @ 550 kPa. (RP70171▲,RP70172▲,RP70173▲ & RP70175▲).
- Maximum 1.5 gpm @ 80 psi, 5.7 L/min @ 550 kPa. (RP70171-▲15 & RP70175-▲15).

WARRANTY

- Lifetime limited warranty on parts (other than electronic parts and batteries) and finishes: or, for commercial users, for 5 years from date of purchase.
- 5 year limited warranty on electronic parts (other than batteries); or, for commercial users, for 1 year from the date of purchase. No warranty is provided on batteries.

Spray Patterns

Full Spray

COMPLIES WITH:

- ASME A112.18.1 / CSA B125.1
- EPA WaterSense®

Delta reserves the right (1) to make changes in specifications and materials, and (2) to change or discontinue models, both without notice or obligation. Dimensions are for reference only. See current full-line price book or www.deltafaucet.com for finish options and product availability.

DSP-B-RP70172 Rev. C

DELTA FAUCET COMPANY

55 E. 111th Street, Indianapolis, Indiana 46280
350 South Edgeware Road, St. Thomas, ON N5P 4L1
© 2015 Masco Corporation of Indiana

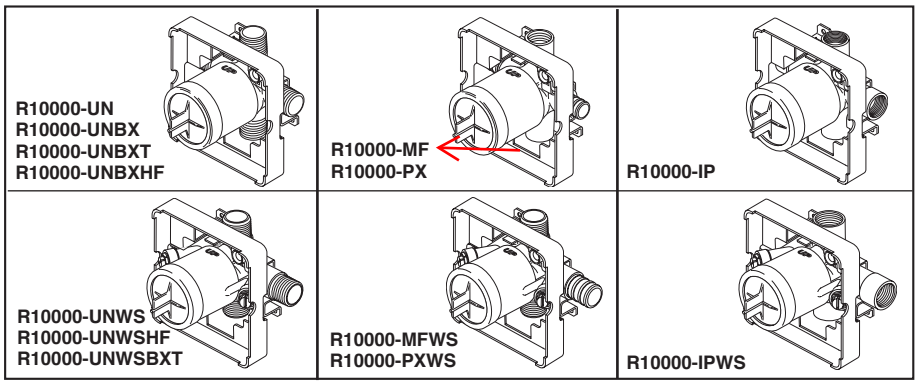

Submitted Model No.:_____

Specific Features:_____

R10000-UN
R10000-UNBX
R10000-UNBXT

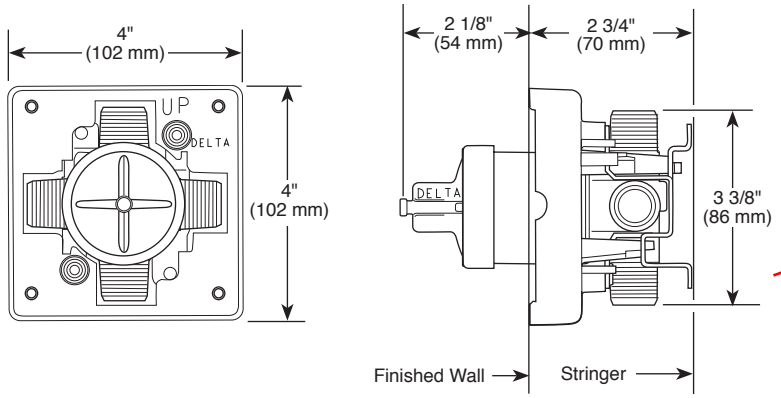

R10000-UNWS

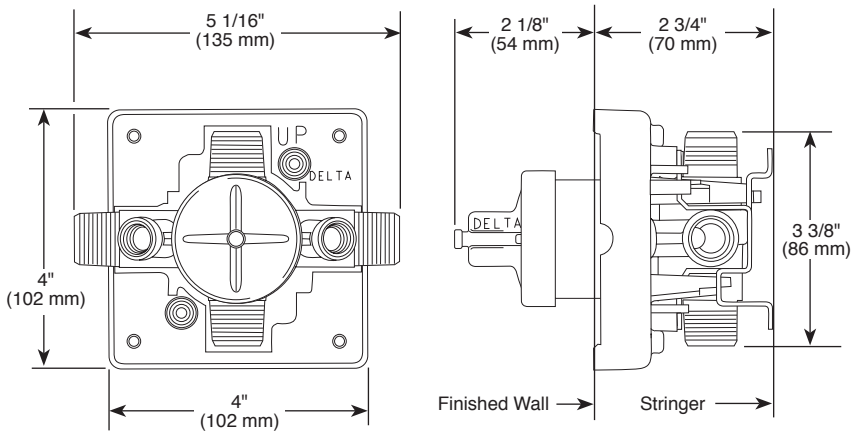

RP75136 Available Extension Kit

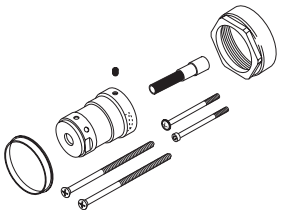

Delta reserves the right (1) to make changes in specifications and materials, and (2) to change or discontinue models, both without notice or obligation. Dimensions are for reference only. See current full-line price book or www.deltafaucet.com for finish options and product availability.

DSP-B-R10000 Rev. I

MULTICHOICE® UNIVERSAL ROUGH VALVE BODY

- R10000-UN (Universal Inlets/Outlets)
- R10000-UNBX (Universal Single Box Model)
- R10000-UNBXHF (High Flow Shower Only)
- R10000-UNBXT (Thin Wall)
- R10000-UNWS (Universal with Stops)
- R10000-UNWSHF (High Flow with Stops)
- R10000-UNWSBXT (Thin Wall with Stops)
- R10000-PX (Pex Crimp Connections with UN Outlets)
- R10000-PXWS (Pex Crimp Connections with Stop with UN Outlets)
- R10000-IP (IPS Inlets/Outlets)
- R10000-IPWS (IPS with Stops)
- R10000-MF (Pex Cold Expansion Connections with UN Outlets)
- R10000-MFWS (Pex Cold Expansion with Stops with UN Outlets)

STANDARD SPECIFICATIONS:

- Forged brass body.
- Back-to-Back installation capabilities.
- Can be tested with air (200 PSI) or water (300 PSI) without valve using supplied test cap.
- Square plasterguard allows for right angle cuts.
- Thin wall mounting.
- For use with MultiChoice® Universal single or dual function trim. Cartridge ships with trim.
- 1/2" outlets and connections.

Note: No tub outlet in HF model.

Note: Should use proper fitting with each type (copper tubing, iron pipe, and pex fitting).

Note: Should use proper tooling with crimping pex fitting and cold expansion pex models.

Note: IP indicates female 1/2" threaded connections.

Note: UN indicates Universal type fitting and is 1/2" NPT male thread with 1/2" C.W.T. female sweat.

WARRANTY

- Lifetime limited warranty on parts (other than electronic parts and batteries) and finishes: or, for commercial users, for 5 years from date of purchase.
- 5 year limited warranty on electronic parts (other than batteries); or, for commercial users, for 1 year from the date of purchase. No warranty is provided on batteries.

COMPLIES WITH:

- ASME A112.18.1 / CSA B125.1

DELTA FAUCET COMPANY
55 E. 111th Street, Indianapolis, Indiana 46280
350 South Edgeware Road, St. Thomas, ON N5P 4L1
© 2015 Masco Corporation of Indiana